SCALE 10%
OF ACTUAL SIZE

AirDome 20’x20’

20x20 Top

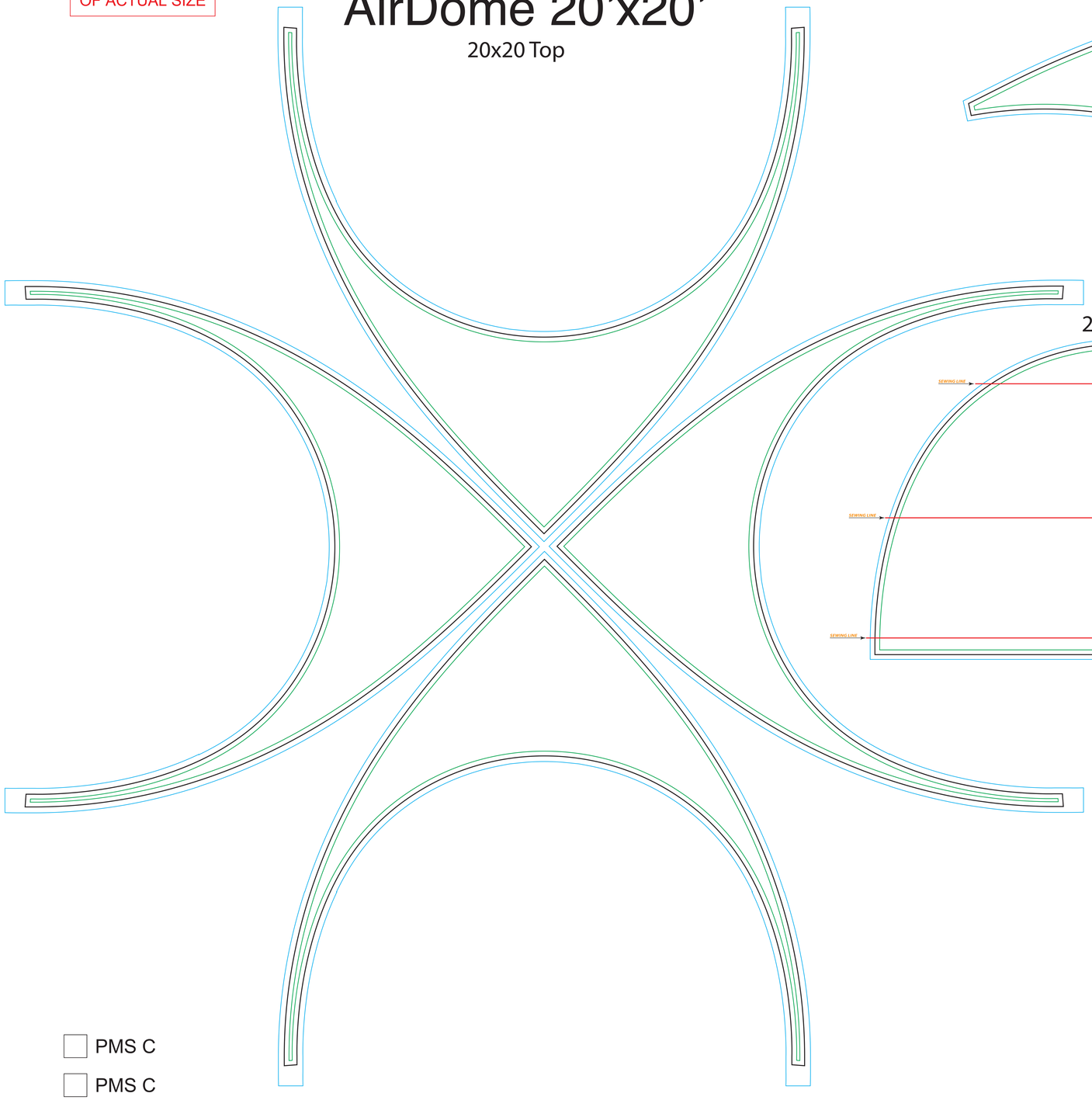

20’ AirDome Awnings

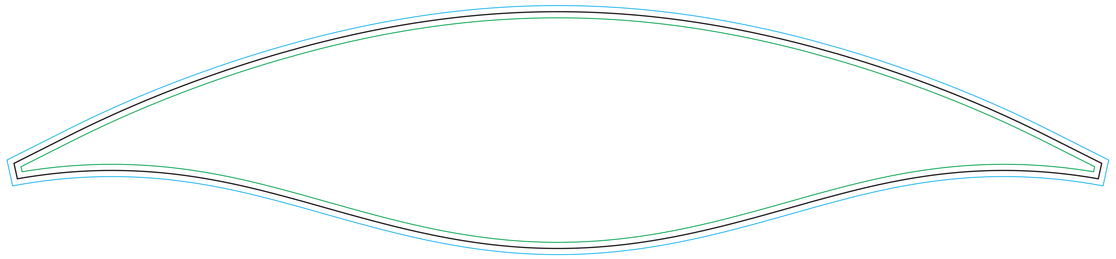

AirDome Awnings Banners Template

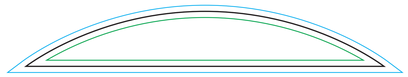

20’ Wall

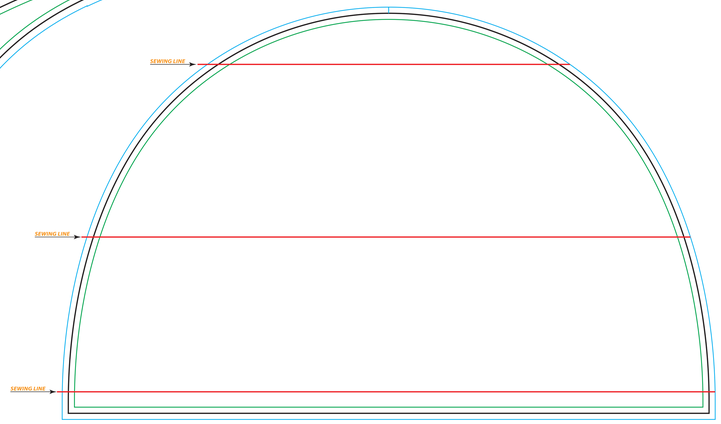

20’ Wall w/ Window

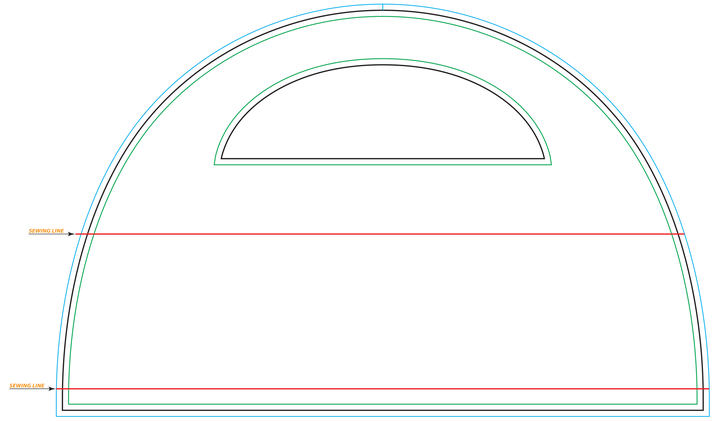

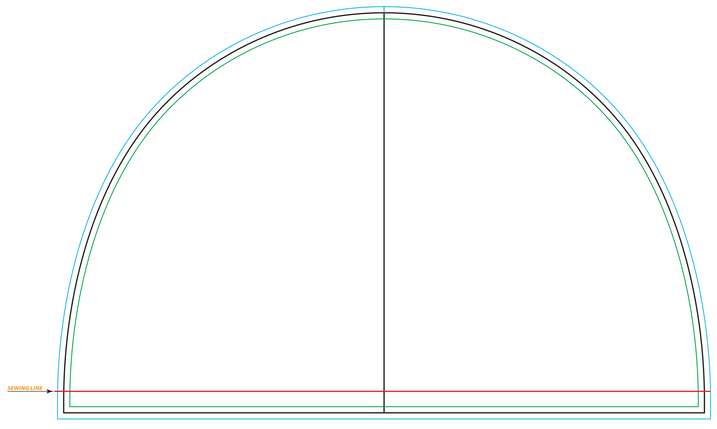

20’ Wall w/ Door

☐ PMS C

☐ PMS C

Adobe Illustrator (Mac or PC) - convert your fonts to outlines and save as native Illustrator format (ai). Artwork should be in only vector format. Artwork should be in CMYK.

Adobe Photoshop (Mac or PC) - rasterize your fonts and save files as .psd (if you have layers) (or need transparency). Will also accept Photoshop EPS formats. Image resolution should be 150 dpi at 100% size the artwork is to be printed at. (or 300 dpi and 1/2 the actual size to be printed)

- All fonts need to be outlines in order to avoid any defaulted text
- Digital imaging will be output in CMYK process
- Use ZIP compression for multiple files

☐ Trim Line ☐ Safe Guide ☐ Bleed ☐ Sewing line *sewing line can be adjusted, *extra fees may apply*